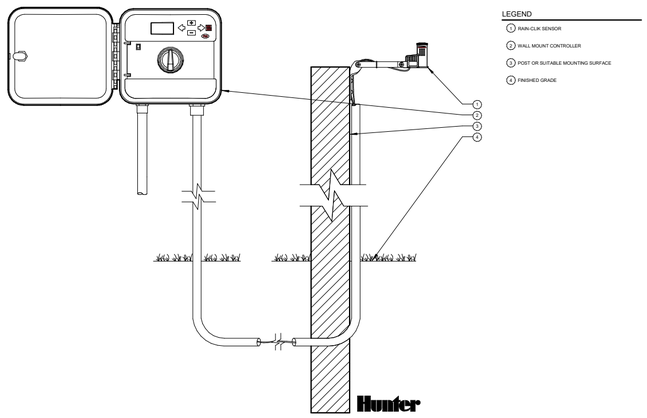

1 S.RC.01 RAIN-CLIK WITH GENERIC WALL MOUNT CONTROLLER
1 : 5

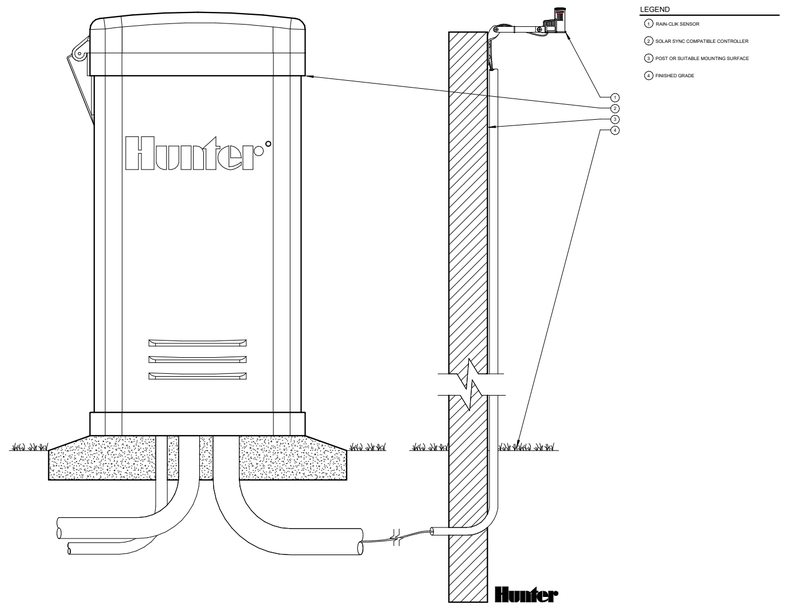

2 S.RC.02 RAIN-CLIK WITH GENERIC PEDESTAL CONTROLLER
1 : 5

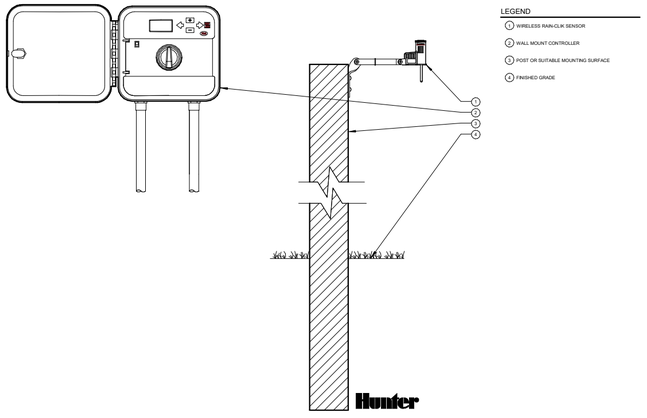

3 S.RC.06 WIRELESS RAIN-CLIK WITH GENERIC WALL MOUNT CONTROLLER
1 : 5

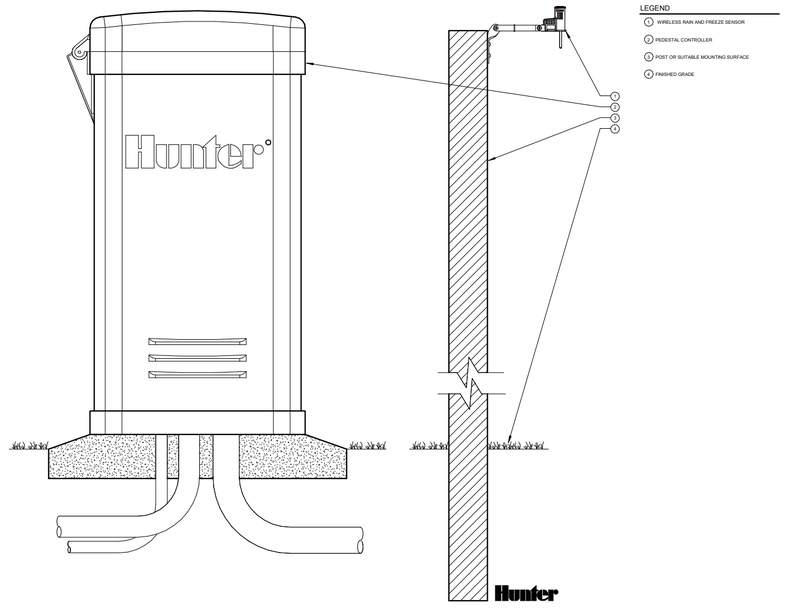

4 S.SS.09 WIRELESS RAIN AND FREEZE CLIK WITH GENERIC PEDESTAL CONTROLLER
1 : 5

Hunter®

https://www.hunterindustries.com/

No.	Description	Date

Hunter Industries

SENSORS

RAIN CLIK

Project Number	RAIN CLIK
Date	10 Dec 2019
Drawn By	Hunter
Checked By	Hunter

RainClik

Scale	1 : 5

10-Dec-19 10:58:17 AM