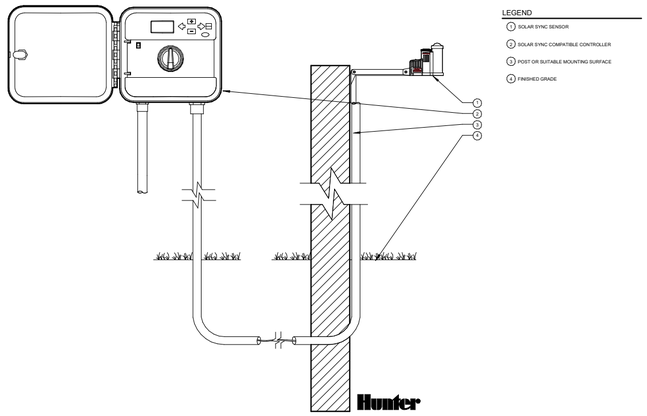

LEGEND

1. SOLAR SYNC SENSOR
2. SOLAR SYNC COMPATIBLE CONTROLLER
3. POST OR SUITABLE MOUNTING SURFACE
4. FINISHED GRADE

S.SS.02 SOLAR SYNC WITH GENERIC WALL MOUNT CONTROLLER
1 1 : 5

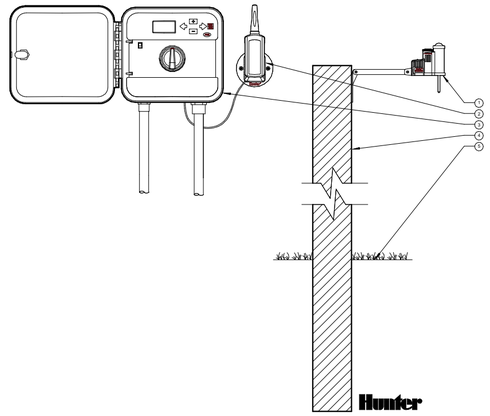

LEGEND

1. SOLAR SYNC WIRELESS SENSOR
2. SOLAR SYNC WIRELESS RECEIVER
3. SOLAR SYNC COMPATIBLE CONTROLLER
4. POST OR SUITABLE MOUNTING SURFACE
5. FINISHED GRADE

S.SS.04 SOLAR SYNC WIRELESS WITH GENERIC WALL MOUNT CONTROLLER
2 1 : 5

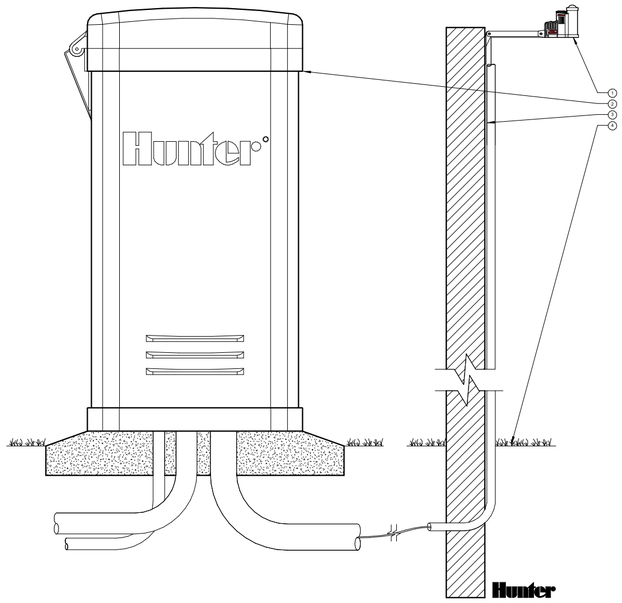

LEGEND

1. SOLAR SYNC SENSOR
2. SOLAR SYNC COMPATIBLE CONTROLLER
3. POST OR SUITABLE MOUNTING SURFACE
4. FINISHED GRADE

S.SS.05 SOLAR SYNC WITH GENERIC PEDESTAL CONTROLLER
3 1 : 5

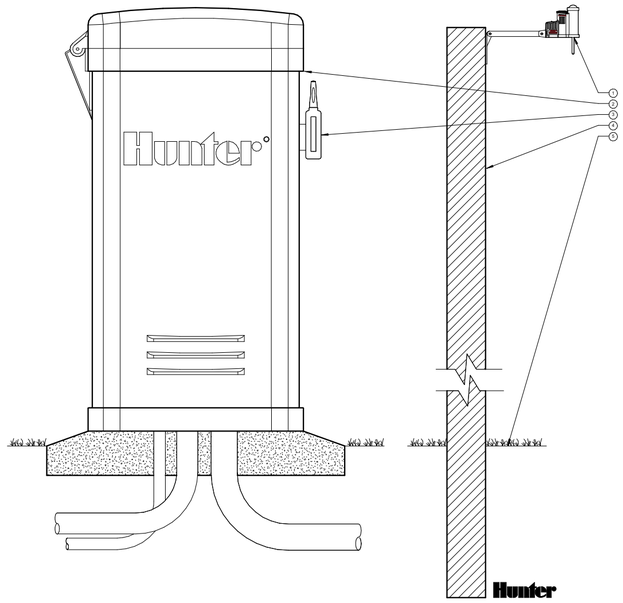

LEGEND

1. SOLAR SYNC WIRELESS SENSOR
2. SOLAR SYNC COMPATIBLE CONTROLLER
3. SOLAR SYNC WIRELESS RECEIVER
4. POST OR SUITABLE MOUNTING SURFACE
5. FINISHED GRADE

S.SS.06 SOLAR SYNC WIRELESS WITH GENERIC PEDESTAL CONTROLLER
4 1 : 5

Hunter®

https://www.hunterindustries.com/

No.	Description	Date

Hunter Industries

SENSORS

SOLAR SYNC

Project Number	SOLAR SYNC
Date	10 Dec 2019
Drawn By	Hunter
Checked By	Hunter

SolarSync

Scale	1 : 5

10-Dec-19 10:56:22 AM